PRODUCT SPECIFICATION

Product P/N	**2000/07**	**Mod. 984A Rev. 06**
Description	**Vent Filter**	

2000/07

Vent Filter

PRODUCT DESCRIPTION	Inlet/Outlet Connectors: 5.9mm-8mm hose barbed both sides. Approximate dimensions: 54mm diameter x 61mm height. Weight: 11g (approx.). Bidirectional filter.
MANUFACTURER NAME	**GVS Filter Technology UK** NFC House Vickers Industrial Estate Mellishaw Lane, Morecambe Lancashire LA3 3EN - United Kingdom **Information** Tel. +44 (0) 1524 847600 e-mail: gvsuk@gvs.com
INTENDED USE / APPLICATION	Filters, hydrophobic and non-hydrophobic for use within oxygen concentrators and other medical equipment such as ventilators. Filters are typically inserted into the gas sampling line to prevent a measuring equipment and it`s system from becoming contaminated to reduce the risk of patient cross-contamination. Autoclavable - Normal cycle 25 minutes at 134°C. Maximum Autoclave cycles: 10.
CLASS OF THE PRODUCT	Disposable medical device - Class IIa Rule 2 Annex IX 93/42 / EEC Rule 2 Annex VIII MDR 2017/745
MATERIALS	**Filter media:** ***Hydrophobic Glass Microfibre Media*** **Frame/Housing Polymer:** ***Transparent Clear Polypropylene Homopolymer (PP) and Blue Polypropylene Homopolymer (PP)*** **Colour:** ***Transparent with blue overmould ring.*** **Regulatory Documentation Required:** - Biocompatibility according ISO 10993-1 - ROHS - BSE/TSE - DEHP plasticizer Free and latex free - Aging

	- REACH - Conflict minerals
PRODUCT CHARACTERISTICS	**Appearance/Visual** As shown on drawing. **Physical/Mechanical** *Approximate dimensions:* ***54mm diameter x 61mm height.*** *Weight:* ***11g (approx.).*** Interfaces (ex: Input / Output connectors): ***5.9mm-8mm hose barbed both sides.*** Operating temperature Range: ***N/A*** Storage temperature Range: ***5 °C to 40 °C*** Other: ***Bidirectional Filter.*** **Biological** Pyrogenicity: ***<0.3 EU/ml*** ***Biocompatibility to ISO10993*** *Category –* ***Surface device*** *Contact –* ***Skin*** *Contact Duration -* ***<24hrs*** **Functional** Air Flow Rate: ***Min. 34.7 l/min @ 5 PSI*** (Ref. 2000/08 REP: 0665/15 with 20% Factor of Safety applied to Min.) Filtration Efficiency: *DEHS Filter Efficiency using 0.3 microns @ 15L/min:* ***Min. 99.99%*** (Ref. 2000/05 REP: 1383/17 with Factor of Safety) Pressure Drop: ***N/A*** Internal Volume: ***N/A*** Operating Lifetime: ***Refer to Instructions for Use.*** Shelf Lifetime: ***5 years from the date of manufacture.*** *Bacterial Filtration Efficiency in accordance with ASTM F2101-07:* ***Min. 99.999%*** *(Staphylococcus aureus @ 30l/min)* Ref.2000/05 REP: EXT831477. *Viral Filtration Efficiency in accordance with ASTM F2101-07:* ***Min. 99.999%*** *(Bacteriophage @ 30l/min)* Ref.2000/05 REP: EXT831476. **Cleanliness** Device assembled within Clean Manufacturing Environment. **Testing** Leakage: ***Static Head Test 27" for 1 minute*** (REP 0620/15)
INSTRUCTIONS / WARNINGS	*Multi-language IFU available.*
PRODUCT SHELF LIFE	*5 years from the date of manufacture.*

	Expiration date and date of manufacture are detailed on the product labelling.
STERILIZATION	***Product can be autoclaved.*** ***Normal cycle is for duration of 25 minutes at 134°C.*** ***Maximum autoclave cycles: 10 times.***
APPLICABLE STANDARDS AND REGULATIONS	**Product Certification required:** - CE mark - FDA **Applicable Standards and Technical Regulations:** *Biological evaluation of Medical Devices - Part 1: Evaluation and Testing - ISO 10993-1.* *Respiratory protective devices - Method for test - Part 7: Determination of particle filter penetration - BS EN 13274-7.* *Medical devices- Application of risk management to medical devices - BS EN ISO 14971.* *Medical devices – symbols to be used with medical device labels, labelling and information to be supplied - Part1: General requirements - ISO 15223-1.* *Small steam sterilizers – EN 13060.* *Steam sterilizers – EN 285.* *Aseptic processing of health care products – EN ISO 13408-part 2*
PACKAGING AND LABELING	*Number of pcs per bag is determined by the sales order.* *The first barcode label is applied to the outside of the bags.* *The second barcode label is applied onto the outside of the box.* *Each bag is labelled with the following traceability information:* ✓ *Quantity* ✓ *Product description* ✓ *Product Date* ✓ *Lot Number (OL and 5-digit batch number to trace back to raw materials used)* ✓ *Operator Code* *Different lots in one box are separately closed and separately labelled.* *Bulk products will be packed in double PE bags* .
CERTIFICATE OF COMPLIANCE	*With each shipment, GVS UK Customer Service will send the CofC to the Customer, based on the lot numbers and date of manufacture.* *Conformity declaration is printed on every invoice and Certificate is according to UNI EN 10204 type 2.1.* *The Quality management system is in compliance with ISO 9001, ISO 13485.*
DRAWING	*The attached drawing is part of this product specification and must not be duplicated or made accessible to a third party without written permission from GVS Filter Technology UK Ltd.*

PRODUCT SPECIFICATION

Product P/N	**2000/07**	**Mod. 984A Rev. 06**
Description	**Vent Filter**	

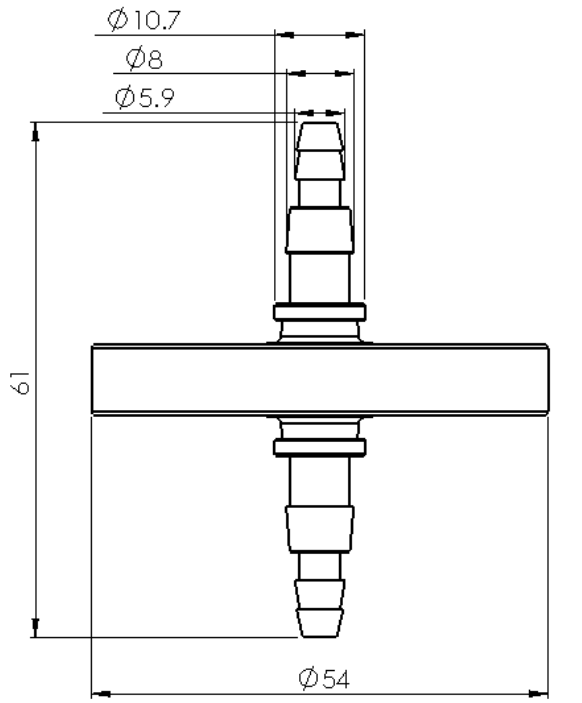

Approximate dimensions for reference only

ACCEPTABLE QUALITY LEVEL

AQL: 0.65 with sampling Plan: ISO2859.

VISUAL REQUIREMENTS

Visual acceptance requirements apply when inspected under below conditions:

Magnification: *Unaided eye at a distance of approximately 35-40cm.*
Light type: *Lighting level must be reasonable for visual detection.*
Timings: *Maximum inspection period per item is 25 seconds.*
For detailed defect list, refer to product control plan.

	Acceptance Requirement	AQL	Sampling Plan
1	Black particle contamination	0.65	ISO 2859 Part 1 General Inspection Level 1
2	Damaged/broken item	0.65	
3	Blocked connector/luer	0.65	
4	Short fill moulding	0.65	
5	Rough surface or edges	0.65	
6	Pronounced injection gate	0.65	

		7	Deformation/distortion	0.65		
		8	Crack	0.65		
		9	Oil/grease	0.65		
		10	Wrong colour	0.65		

GENERAL SAFETY AND PERFORMANCE REQUIREMENTS	**Special characteristic**: *Product characteristic which can affect safety or compliance with regulations, fit, function, performance or subsequent processing of product.* **Special Characteristic # 01:** *Air flow rate at 5PSI* **Special Characteristic # 02:** *Filter Efficiency @ 15L/min using DEHS @ 0.3µm EN 1822.* **Special Characteristic # 03:** *Bacterial Filtration Efficiency in accordance with ASTM F2101-07* *Viral Filtration Efficiency in accordance with ASTM F2101-07* **Special Characteristic # 04:** *27" water leak test – Static head test.*

This material specification describes the properties of product above indicated. This document contains general requirements, material description, drawing references, defect specification, biological material requirements.

REVISIONS AND APPROVALS:

DATE	REV.	REASON FOR CHANGE	ISSUED AND CONTROLLED BY: (NAME/FUNCTION/SIGNATURE)	APPROVED BY: (NAME/FUNCTION/SIGNATURE)
07/09/2021	2	Intended use amended.	Kinga Gawdzik – Engineering Support Technician	Andrew Pearce – Quality Manager

PRODUCT SPECIFICATION

Product P/N	**2000/07**	**Mod. 984A Rev. 06**
Description	**Vent Filter**	

CUSTOMER APPROVAL:

We accept this material specification as a part of the agreed terms of delivery.

Company Name:

Approved by:

NAME/FUNCTION

SIGNATURE

DATE

COMPANY STAMP

Please send back this document signed for approval. If we will not receive this specification signed, we consider the first order placed as implicit approval.