PRODUCT SPECIFICATION

Product P/N	**2000/05BAK**	**Mod. 984A Rev. 06**
Description	**Vent Filter set**	

2000/05BAK

Vent Filter set

PRODUCT DESCRIPTION	Inlet/Outlet Connectors of the filter **2000/05:** OD 8mm (approx.) hose barbed and ID 4.4mm (approx.) - both sides. Approx. dimensions: 54mm diameter x 53.3mm height. Weight: 11g (approx.). Bidirectional filter. Mobile male luer lock connector: OD6.6mm/ID3.8mm, OD ISO 4.0mm/ID 2.6mm with approx. dimensions: 32mm height. This filter has PVC tubing with OD 9mm and ID 6mm attached to both connectors, 600mm tubing on one side and 2500mm tubing on the other side. Both pieces of tubing have mobile male luer lock connectors attached to their ends.
MANUFACTURER NAME	**GVS Filter Technology UK** NFC House Vickers Industrial Estate Mellishaw Lane, Morecambe Lancashire LA3 3EN - United Kingdom **Information** Tel. +44 (0) 1524 847600 e-mail: gvsuk@gvs.com
INTENDED USE / APPLICATION	Filters, hydrophobic and non-hydrophobic for use within oxygen concentrators and other medical equipment such as ventilators. Filters are typically inserted into the gas sampling line to prevent a measuring equipment and it`s system from becoming contaminated to reduce the risk of patient cross-contamination.
CLASS OF THE PRODUCT	Disposable medical device - Class IIa Rule 2 Annex IX 93/42 / EEC Rule 2 Annex VIII MDR 2017/745
MATERIALS	**Filter media:** ***Hydrophobic Glass Microfibre Media*** **Frame/Housing Polymer**: *2000/05:* ***Transparent Clear Polypropylene homopolymer (PP)*** ***Green Polypropylene homopolymer (PP)*** **Colour:** ***Transparent with Green overmould ring***

	Other insert(s): - *Tube:* ***PVC*** - *Mobile male luer lock connector:* ***Acrylonitrile Butadiene Styrene (ABS) and Polypropylene (PP)*** - *Adhesive:* ***UV curable adhesive*** **Regulatory Documentation Required:** - Biocompatibility according ISO 10993-1 - ROHS - BSE/TSE - DEHP plasticizer Free and latex free - Aging - REACH - Conflict minerals
PRODUCT CHARACTERISTICS	**Appearance/Visual** As shown on drawing. **Physical/Mechanical** *Approx. dimensions of:* *- 2000/05:* ***54mm diameter x 53.3mm height.*** *- PVC tube:* ***OD 9mm and ID 6mm, 600mm length and 2500mm length.*** *- Mobile male luer lock connector:* ***32mm.*** *Weight of the filter:* ***11gm (approx.).*** Interfaces (ex: Input / Output connectors): *2000/05:* ***OD 8mm (approx.) hose barbed and ID 4.4mm (approx.) – both sides.*** *Mobile male luer lock connector:* ***OD6.6mm/ID3.8mm, OD ISO 4.0mm/ID 2.6mm.*** Operating temperature Range: ***N/A*** Storage temperature Range: ***5 °C to 40 °C*** ***Bidirectional Filter.*** **Biological** Pyrogenicity: ***<0.3 Eu/ml*** ***Biocompatibility to ISO10993*** *Category –* ***Surface device*** *Contact –* ***Skin*** *Contact Duration -* ***<24hrs*** For kit performance characteristics for 2000/05BAK– Please refer to 2000/05 Technical data sheet. **Functional** Air Flow Rate: ***Min. 85 l/min*** *@ 5PSI* (REP 0612/15 with 20% Factor of Safety applied to Min.) Filtration Efficiency: *Filter Efficiency DEHS @ 0.3 microns @ 15L/min:* ***Min. 99.99%*** (REP: 1383/17 with Factor of Safety applied to Min.)

	Pressure Drop*: **N/A*** Internal Volume: ***N/A*** Operating Lifetime: ***Refer to Instructions for Use.*** Shelf Lifetime: ***5 years from the date of manufacture.*** *Bacterial Filtration Efficiency in accordance with ASTM F2101-07:* ***Min. 99.999%*** *(Staphylococcus aureus @ 30l/min)* REP: EXT831477. *Viral Filtration Efficiency in accordance with ASTM F2101-07:* ***Min. 99.999%*** *(Bacteriophage @ 30l/min)* REP: EXT831476. **Cleanliness** Device assembled within Clean Manufacturing Environment. **Testing** Burst test: ***Min. 64psi*** (REP 0616/15 with 20% Factor of Safety) Leakage: ***Static Head Test 27" for 1 minute*** (REP 0620/15)
INSTRUCTIONS / WARNINGS	*Multi-language IFU available.*
PRODUCT SHELF LIFE	*5 years from the date of manufacture.* *Expiration date and date of manufacture are detailed on the product labelling.*
STERILIZATION	*Sterile version of product available (Ethylene oxide - Max 55°C)*
APPLICABLE STANDARDS AND REGULATIONS	**Product Certification required:** - CE mark - FDA **Applicable Standards and Technical Regulations:** *Biological evaluation of Medical Devices - Part 1: Evaluation and Testing - ISO 10993-1.* *Medical devices- Application of risk management to medical devices - BS EN ISO 14971.* *Medical devices – symbols to be used with medical device labels, labelling and information to be supplied - Part1: General requirements - ISO 15223-1.* *Sterilization of health care products – Ethylene oxide sterilization – ISO 11135-1.* *Sterilization of medical devices – Microbiological Methods – Part 1: Estimation of population of Microorganisms on products – ISO 11737-1.* *High Efficiency Air Filters – BS EN 1822.*
PACKAGING AND LABELING	*Number of pcs per bag is determined by the sales order.* *The first barcode label is applied to the outside of the bags.* *The second barcode label is applied onto the outside of the box.* *Each bag is labelled with the following traceability information:*

PRODUCT SPECIFICATION

Product P/N	**2000/05BAK**	**Mod. 984A Rev. 06**
Description	**Vent Filter set**	

	✓ *Quantity* ✓ *Product description* ✓ *Product Date* ✓ *Lot Number (OL and 5-digit batch number to trace back to raw materials used)* ✓ *Operator Code* *Different lots in one box are separately closed and separately labelled.* *Bulk products will be packed in double PE bags.*
CERTIFICATE OF COMPLIANCE	*With each shipment, GVS UK Customer Service will send the CofC to the Customer, based on the lot numbers and date of manufacture.* *Conformity declaration is printed on every invoice and Certificate is according to UNI EN 10204 type 2.1.* *The Quality management system is in compliance with ISO 9001, ISO 13485.*
DRAWING	*The attached drawing is part of this product specification and must not be duplicated or made accessible to a third party without written permission from GVS Filter Technology UK Ltd.* 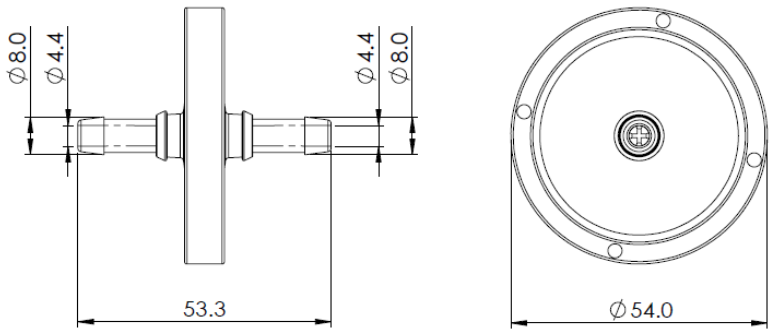

PRODUCT SPECIFICATION

Product P/N	**2000/05BAK**	**Mod. 984A Rev. 06**
Description	**Vent Filter set**	

	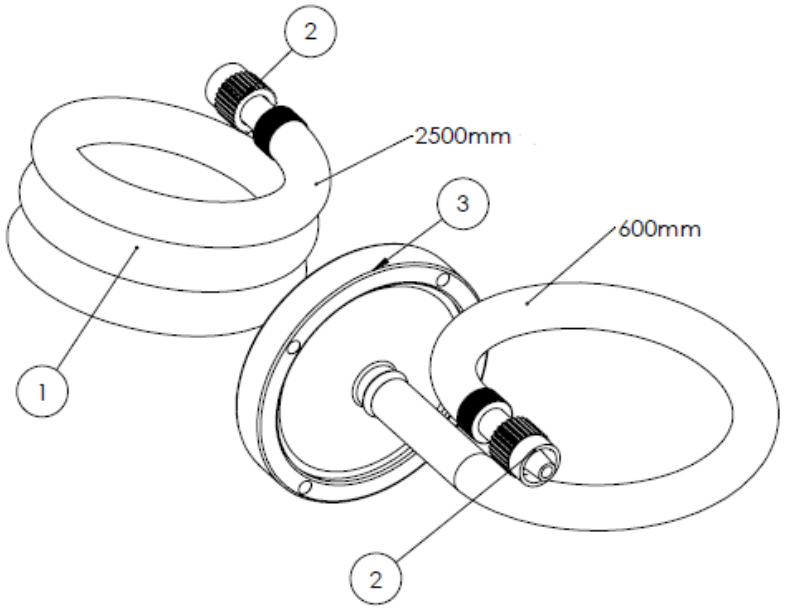 Approximate dimensions for reference only
ACCEPTABLE QUALITY LEVEL	AQL: with sampling Plan: 0.65 AQL to ISO 2859-1

PRODUCT SPECIFICATION

Product P/N	**2000/05BAK**	**Mod. 984A Rev. 06**
Description	**Vent Filter set**	

VISUAL REQUIREMENTS

Visual acceptance requirements apply when inspected under below conditions:

Magnification: *Unaided eye at a distance of approximately 35-40cm.*
Light type: *Lighting level must be reasonable for visual detection.*
Timings: *Maximum inspection period per item is 25 seconds.*
For detailed defect list, refer to product control plan.

	Acceptance Requirement	AQL	Sampling Plan
1	Black particle contamination	0.65	ISO 2859 Part 1 General Inspection Level 1
2	Damaged/broken item	0.65	
3	Blocked connector/luer	0.65	
4	Short fill moulding	0.65	
5	Rough surface or edges	0.65	
6	Pronounced injection gate	0.65	
7	Deformation/distortion	0.65	
8	Crack	0.65	
9	Oil/grease	0.65	
10	Wrong colour	0.65	

GENERAL SAFETY AND PERFORMANCE REQUIREMENTS

Special characteristic: *Product characteristic which can affect safety or compliance with regulations, fit, function, performance or subsequent processing of product.*

Special Characteristic # 01: *Air Flow rate at 5psi*

Special Characteristic # 02: *Filter Efficiency @ 15L/min using DEHS @ 0.3µm*

Special Characteristic # 03: *Bacterial Filtration Efficiency in accordance with ASTM F2101-07*

Viral Filtration Efficiency in accordance with ASTM F2101-07

Special Characteristic # 04: *Burst Pressure*

Special Characteristic # 05: *27" water leak test – Static head test*

This material specification describes the properties of product above indicated. This document contains general requirements, material description, drawing references, defect specification, biological material requirements.

PRODUCT SPECIFICATION

Product P/N	**2000/05BAK**	**Mod. 984A Rev. 06**
Description	**Vent Filter set**	

REVISIONS AND APPROVALS:

DATE	REV.	REASON FOR CHANGE	ISSUED AND CONTROLLED BY: (NAME/FUNCTION/SIGNATURE)	APPROVED BY: (NAME/FUNCTION/SIGNATURE)
09/09/2021	3	Product characteristics amended.	Kinga Gawdzik - Engineering Support Technician	Andrew Pearce – Quality Manager

CUSTOMER APPROVAL:

We accept this material specification as a part of the agreed terms of delivery.

Company Name:

Approved by:

NAME/FUNCTION

SIGNATURE

DATE

COMPANY STAMP

Please send back this document signed for approval. If we will not receive this specification signed, we consider the first order placed as implicit approval.