PRODUCT SPECIFICATION

Product P/N	**9064/751**	**Mod. 984A Rev. 06**
Description	**MIDI HME**	

9064/751

MIDI HME

PRODUCT DESCRIPTION	Inlet/Outlet Connectors: 22mm Male / 15mm Female and 22mm Female / 15mm Male ISO Connectors and Ø4.3mm ISO Luer Port. Bidirectional HME. Approx. dimensions: Ø48.1mm x 81.4mm height. Weight: 21gm (approx.).
MANUFACTURER NAME	**GVS Filter Technology UK** NFC House Vickers Industrial Estate Mellishaw Lane, Morecambe Lancashire LA3 3EN - United Kingdom **Information** Tel. +44 (0) 1524 847600 e-mail: gvsuk@gvs.com
INTENDED USE / APPLICATION	For use within Anaesthesia, Respiratory and Critical Care clinical areas. Indicated for use with patients whose upper airways are being bypassed by an artificial tracheal airway or receiving artificial ventilator support. The luer port connector is used for monitoring respiratory and/or anaesthesia gases.
CLASS OF THE PRODUCT	Disposable medical device - Class IIa Rule 2 Annex IX 93/42 / EEC Rule 2 Annex VIII MDR 2017/745
MATERIALS	**Filter media:** ***Blue Polyurethane Foam (PU)*** **Frame/Housing Polymer**: ***Transparent Green Tinted Polypropylene (PP)*** **Colour:** ***Transparent Green*** **Regulatory Documentation Required:** - Biocompatibility according ISO 10993-1 - ROHS - BSE/TSE - DEHP plasticizer Free and latex free - Aging - REACH - Conflict minerals -
PRODUCT CHARACTERISTICS	**Appearance/Visual** As shown on drawing.

PRODUCT SPECIFICATION

Product P/N	**9064/751**	**Mod. 984A Rev. 06**
Description	**MIDI HME**	

	Physical/Mechanical ***Approx. dimensions: Ø48.1mm x 81.4mm height.*** ***Weight: 21gm (approx.).*** Interfaces (ex: Input / Output connectors): ***22mm Male / 15mm Female and 22mm Female / 15mm Male ISO Connectors and Ø4.3mm ISO Luer Port.*** Operating temperature Range: ***N/A*** Storage temperature Range: ***5 °C to 40 °C*** ***Bidirectional HME.*** **Biological** Pyrogenicity: ***<0.3 Eu/ml*** ***Biocompatibility to ISO10993*** *Category* – ***Surface device*** *Contact* – ***Skin*** *Contact Duration* - ***<24hrs*** **Functional** Air Flow Rate: ***15l/min, 30l/min, 60l/min, 90l/min.*** Pressure Drop: *Flow Resistance @ 15L/min in accordance with EN ISO 9360-1:* ***Max. 44Pa*** *Flow Resistance @ 30L/min in accordance with EN ISO 9360-1:* ***Max. 110Pa*** *Flow Resistance @ 60L/min in accordance with EN ISO 9360-1:* ***Max. 308Pa*** *Flow Resistance @ 90L/min in accordance with EN ISO 9360-1:* ***Max. 616Pa*** (REP:0779/16 with 10% safety margin applied to Max.) Internal Volume: ***33ml (approx.)*** Operating Lifetime: ***Refer to Instructions for Use.*** Shelf Lifetime: ***5 years from the date of manufacture.*** *Moisture Loss @ 500ml Tidal Volume in accordance with EN ISO 9360-1:* ***Max. 9.52mg/l*** (REP: 0780/16 with +0.5ml factor of safety) *Moisture Output @ 500ml Tidal Volume in accordance with EN ISO 9360-1:* ***Min. 32.72mg/l*** (REP: 0780/16 with +0.5ml factor of safety) *Gas leakage in accordance with EN9360:* ***Max. 0.0 ml/min*** (REP:1152/17) **Cleanliness** Device assembled within Class 8 Cleanroom. **Testing** Leak test at 3PSI.
INSTRUCTIONS / WARNINGS	*Multi-language IFU available.*
PRODUCT SHELF LIFE	*5 years from the date of manufacture.*

	Expiration date and date of manufacture are detailed on the product labelling.
STERILIZATION	*Sterile version of product available (Ethylene oxide - Max 55°C)*
APPLICABLE STANDARDS AND REGULATIONS	**Product Certification required:** - CE mark - FDA **Applicable Standards and Technical Regulations:** *Biological evaluation of Medical Devices - Part 1: Evaluation and Testing - ISO 10993-1.* *Medical devices- Application of risk management to medical devices - BS EN ISO 14971.* *Medical devices – symbols to be used with medical device labels, labelling and information to be supplied - Part1: General requirements - ISO 15223-1.* *Anaesthetic and respiratory equipment – conical connectors – part 1: Cones and sockets – ISO 5356-1.* *Sterilization of health care products – Ethylene oxide sterilization – ISO 11135-1.* *Sterilization of medical devices – Microbiological Methods – Part 1: Estimation of population of Microorganisms on products – ISO 11737-1.*
PACKAGING AND LABELING	*Number of pcs per bag is determined by the sales order.* *The first barcode label is applied to the outside of the bags.* *The second barcode label is applied onto the outside of the box.* *Each bag is labelled with the following traceability information:* ✓ *Quantity* ✓ *Product description* ✓ *Product Date* ✓ *Lot Number (OL and 5-digit batch number to trace back to raw materials used)* ✓ *Operator Code* *Different lots in one box are separately closed and separately labelled.* *Bulk products will be packed in double PE bags.*
CERTIFICATE OF COMPLIANCE	*With each shipment, GVS UK Customer Service will send the CofC to the Customer, based on the lot numbers and date of manufacture.* *Conformity declaration is printed on every invoice and Certificate is according to UNI EN 10204 type 2.1.* *The Quality management system is in compliance with ISO 13485.*
DRAWING	*The attached drawing is part of this product specification and must not be duplicated or made accessible to a third party without written permission from GVS Filter Technology UK Ltd.*

PRODUCT SPECIFICATION

Product P/N	**9064/751**	**Mod. 984A Rev. 06**
Description	**MIDI HME**	

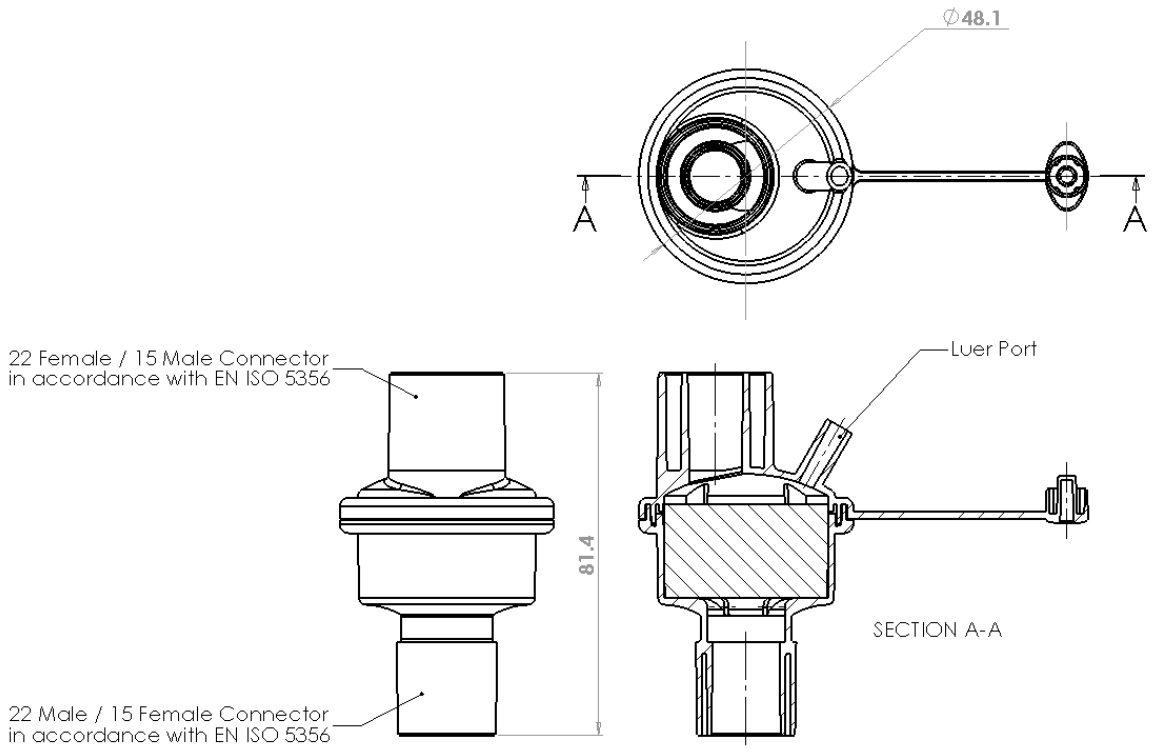

Approximate dimensions for reference only

ACCEPTABLE QUALITY LEVEL

AQL: 0.65 with sampling Plan: ISO2859.

VISUAL REQUIREMENTS

Visual acceptance requirements apply when inspected under below conditions:

Magnification: *Unaided eye at a distance of approximately 35-40cm.*
Light type: *Lighting level must be reasonable for visual detection.*
Timings: *Maximum inspection period per item is 25 seconds.*
For detailed defect list, refer to product control plan.

	Acceptance Requirement	AQL	Sampling Plan
1	Black particle contamination	0.65	ISO 2859 Part 1 General Inspection Level 1
2	Damaged/broken item	0.65	
3	Blocked connector/luer	0.65	
4	Weld marks	0.65	
5	Short fill moulding	0.65	

		6	Rough surface or edges	0.65		
		7	Pronounced injection gate	0.65		
		8	Deformation/distortion	0.65		
		9	Crack	0.65		
		10	Oil/grease	0.65		
		11	Wrong colour	0.65		
		12	Weld fault	0.65		

GENERAL SAFETY AND PERFORMANCE REQUIREMENTS

Special characteristic: *Product characteristic which can affect safety or compliance with regulations, fit, function, performance or subsequent processing of product.*

Special Characteristic # 01:

Flow Resistance @ 30L/min in accordance with EN ISO 9360-1,

Flow Resistance @ 60L/min in accordance with EN ISO 9360-1,

Flow Resistance @ 90L/min in accordance with EN ISO 9360-1.

Special Characteristic # 02: *Moisture Output @ 500ml Tidal Volume in accordance with EN ISO 9360-1,*

Moisture Loss @ 500ml Tidal Volume in accordance with EN ISO 9360-1.

Special Characteristic # 03: *Conical connectors compliant in accordance with EN5356.*

Special Characteristic # 04: *Gas Leakage compliant in accordance with EN9360.*

This material specification describes the properties of product above indicated. This document contains general requirements, material description, drawing references, defect specification, biological material requirements.

REVISIONS AND APPROVALS:

DATE	REV.	REASON FOR CHANGE	ISSUED AND CONTROLLED BY: (NAME/FUNCTION/SIGNATURE)	APPROVED BY: (NAME/FUNCTION/SIGNATURE)
30/07/2021	4	Functional characteristics updated.	Kinga Gawdzik – Engineering Support Technician	Andrew Pearce – Quality Manager

PRODUCT SPECIFICATION

Product P/N	**9064/751**	**Mod. 984A Rev. 06**
Description	**MIDI HME**	

CUSTOMER APPROVAL:

We accept this material specification as a part of the agreed terms of delivery.

Company Name:

Approved by:

NAME/FUNCTION

SIGNATURE

DATE

COMPANY STAMP

Please send back this document signed for approval. If we will not receive this specification signed, we consider the first order placed as implicit approval.